User Manual

for S6 Series Grid Inverter
(Australian version)

Applicable models
S6-GR1P3K-S(21A)
S6-GR1P3.6K-S(21A)
S6-GR1P4K-S(21A)
S6-GR1P4.6K-S(21A)
S6-GR1P5K-S(21A)
S6-GR1P6K-S(21A)

Applicable System
Single phase system

Version 1.0, Release Date: 10,2026

Contents

1. Introduction 2
   1.1 Product Description 2
   1.2 Packaging 3
   1.3 Product Handing 4
   1.4 Product Storage 4
2. Safety Instructions 5
   2.1 Safety Symbols 5
   2.2 General Safety Instructions 5
   2.3 Notice For Use 7
   2.4 Notice for Disposal 7
3. Overview 8
   3.1 Front Panel Display 8
4. Installation 9
   4.1 Select Location for the Inverter 9
   4.2 Moving the Inverter 11
   4.3 Mounting the Inverter 12
   4.4 Electrical Connections 14
      4.4.1 Connect PV side of inverter 14
      4.4.2 Connect grid side of inverter 18
      4.4.3 External ground connection 21
      4.4.4 Max. over current protection device (OCPD) 22
      4.4.5 Inverter monitoring connection 22
      4.4.6 Electrical connection diagram 23
      4.4.7 Meter Connection(optional) 23
      4.4.8 CT connections(optional) 28
      4.4.9 DRED port connections 29
      4.4.10 External Residual Current Device(RCD) 30
      4.4.11 Earth Fault Alarm 30
5. Commissioning 31
   5.1 Preparation 31
   5.2 APP Download 31
   5.3 Log in the APP via bluetooth 32
   5.4 Start the Inverter 33
   5.5 Stop the Inverter 33
   5.6 Australian Grid Code Settings 34

Contents

5.7 Export Power Control 38
5.7.1 Built-in EPM Setting 38
5.7.2 External EPM Setting 42
5.8 AFCI Setting 42
5.9 MPPT Multi-peak Scanning Setting 42
6. Operation 43
6.1 Home Page 43
6.2 Info Page 44
6.3 Alarm Page 44
6.4 Setting Page 45
7. Maintenance 46
8. Troubleshooting 47
9. Specifications 52

1. Introduction

1.1 Product Description

Solis S6 Single Phase Inverters integrate DRM and backflow power control function, that could suitable for smart grid requirement.

This manual covers the S6 Single Phase Inverter model listed below:

S6-GR1P3K-S(21A), S6-GR1P3.6K-S(21A), S6-GR1P4K-S(21A), S6-GR1P4.6K-S(21A), S6-GR1P5K-S(21A), S6-GR1P6K-S(21A)

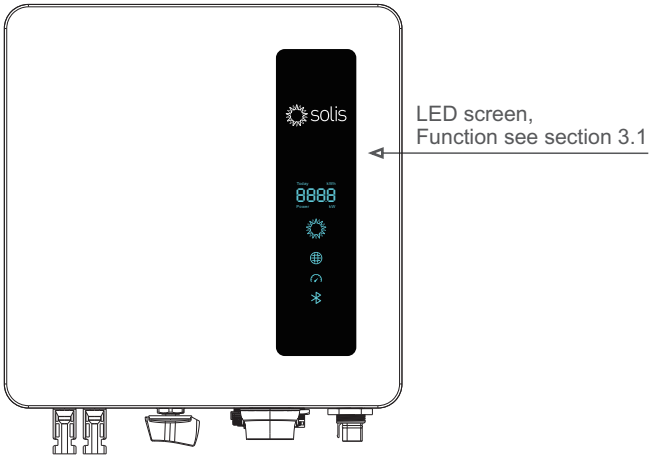

Figure 1.1 Front view

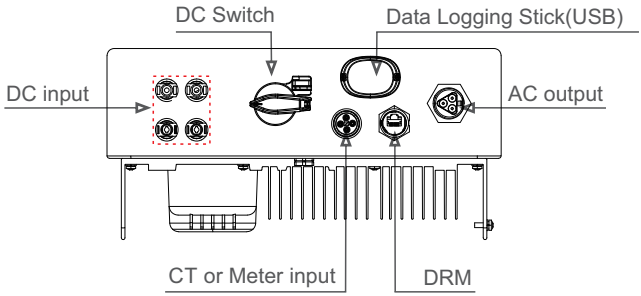

Figure 1.2 Bottom view

1.2 Packaging

When you receive the inverter, please ensure that all the parts listed below are included:

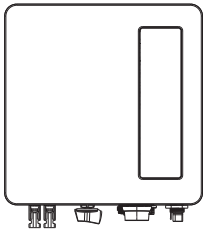

Inverter x1

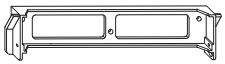

Back plate x1

Fastening screw x2

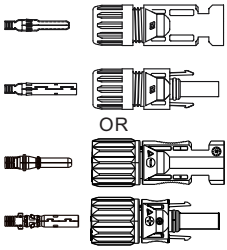

DC connector x2

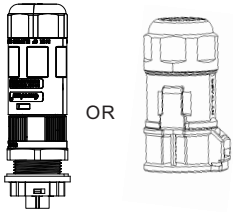

AC connector x1

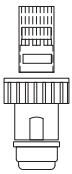

RJ45 connector x1

WiFi Stick x1
(Optional)

CT x1
(Optional)

Manual x1

If anything is missing, please contact your local Solis distributor.

1.3 Product Handling

Please review the instruction below for handling the inverter:

1. The red circles below denote cutouts on the product package.
Push in the cutouts to form handles for moving the inverter.
2. Open the carton, then handle both sides of inverter through the area denoted dotted line.

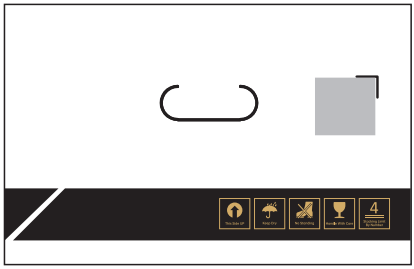

Figure 1.3 move the inverter

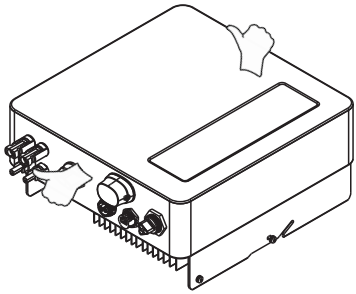

Figure 1.4 Inverter handles

1.4 Product Storage

If the inverter is not to be installed immediately, storage instructions and environmental conditions are below:

- Use the original box to repackage the inverter, seal with adhesive tape with the desiccant inside the box.
- Store the inverter(s) in a clean and dry place, free of dust and dirt.
- Storage temperature must be between -40℃ and 70℃ and the humidity should be between 0 and 95% non-condensing.
- Stack no more than four (4) inverters high.
- Keep box(es) away from corrosive materials to avoid damage to the inverter enclosure.
- Inspect packaging regularly. If packaging is damaged(wet, pest damage, etc), repackage the inverter immediately.
- Store the inverter(s) on a flat, hard surface - not inclined or upside down.
- After long-term storage, the inverter needs to be fully examined and tested by qualified service or technical personnel before using.
- Restarting after a long period of non-use requires the equipment to be inspected and, in some cases, the removal of oxidation and dust that has settled inside the equipment will be required.

2. Safety & Warning

2.1 Safety Symbols

Safety symbols used in this manual, which highlight potential safety risks and important safety information, are listed as follows:

WARNING:
WARNING symbol indicates important safety instructions, which if not correctly followed, could result in serious injury or death.

NOTE:
NOTE symbol indicates important safety instructions, which if not correctly followed, could result in some damage or the destruction of the inverter.

CAUTION:
CAUTION, RISK OF ELECTRIC SHOCK symbol indicates important safety instructions, which if not correctly followed, could result in electric shock.

CAUTION:
CAUTION, HOT SURFACE symbol indicates safety instructions, which if not correctly followed, could result in burns.

2.2 General Safety Instructions

WARNING:
Only devices in compliance with SELV (EN 69050) may be connected to the RS485 and USB interfaces.

WARNING:
Please don't connect PV array positive(+) or negative(-) to ground, it could cause serious damage to the inverter.

NOTE:
PV module used with inverter must have an IEC 61730 Class A rating.

WARNING:
Electrical installations must be done in accordance with the local and national electrical safety standards.

2. Safety & Warning

WARNING:
No live construction is allowed, and before installation, ensure that the equipment is in good condition.

5min

WARNING:
Do not touch any inner live parts until 5 minutes after disconnection from the utility grid and the PV input.

CAUTION:
Risk of electric shock. Do not remove cover. There is no user serviceable parts inside. Refer servicing to qualified and accredited service technicians.

WARNING:
To reduce the risk of fire, over-current protective devices (OCPD) are required for circuits connected to the Inverter. The DC OCPD shall be installed per local requirements. All photovoltaic source and output circuit conductors shall have disconnects that comply with the NEC Article 690, Part II.
All Solis S6 Single Phase Inverters feature an integrated DC switch.

CAUTION:
The PV array (Solar panels) supplies a DC voltage when they are exposed to sunlight.

WARNING:
Destruction of the inverter due to overvoltage；Damage to the product due to ground fault on DC side during operation； Damage to the product due to sand, dust and moisture ingress if the DC inputs are not closed.

CAUTION:
The surface temperature of the inverter can exceed 75℃ (167F).
To avoid risk of burns, DO NOT touch the surface when inverter is operating.
The inverter must be installed out of reach of children.

CAUTION:
Risk of electric shock from energy stored in capacitors of the Inverter.
Do not remove cover for 5 minutes after disconnecting all power sources (service technician only). Warranty may be voided if the cover is removed without unauthorized.

2.3 Notice For Use

The inverter has been constructed according to the applicable safety and technical guidelines. Use the inverter in installations that meet the following specifications only:

1. Permanent installation is required.
2. All components must remain within their permitted operating ranges and their installation requirements at all times.
3. The product must only be used in countries for which it is approved or released by Solis and the grid operator.
4. Use Solis products only in accordance with the information provided in the enclosed documentation and with the locally applicable laws, regulations, standards and directives. Any other application may cause personal injury or property damage.
5. This document does not replace any regional, state, provincial, federal or national laws, regulations or standards that apply to the installation, electrical safety and use of the product. Solis assumes no responsibility for the compliance or non-compliance with such laws or codes in connection with the installation of the product.
6. The electrical installation must meet all the applicable regulations and standards.
7. The inverter must be installed according to the instructions stated in this manual.
8. The inverter must be installed according to the correct technical specifications.
9. To startup the inverter, the Grid Supply Main Switch (AC) must be switched on, before the solar panel's DC isolator shall be switched on. To stop the inverter, the Grid Supply Main Switch (AC) must be switched off before the solar panel's DC isolator shall be switched off.
10. Single phase inverters can be used in parallel and external devices should be used in accordance with the requirements of AS/NZS 4777.1.
    Single phase inverters can't be used in multiple-phase installations.

2.4 Notice for Disposal

This product shall not be disposed of with household waste. They should be segregated and brought to an appropriate collection point to enable recycling and avoid potential impacts on the environment and human health. Local rules in waste management shall be respected .

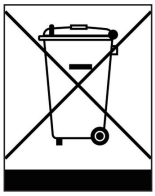

3. Overview

3.1 Front Panel Display

There are four indicators on the inverter(Power, COM, CT/Meter and Bluetooth) which indicate the working status of the inverter.

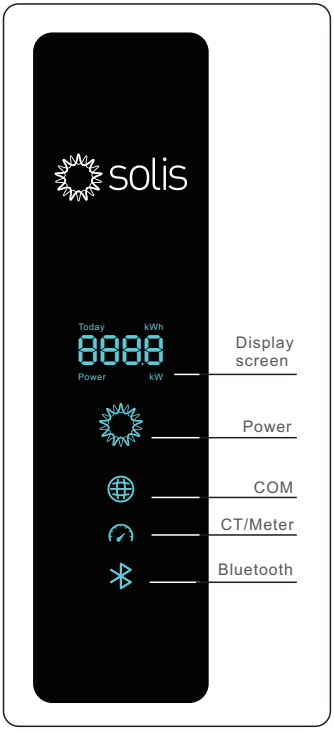

Light	Status	Description
Today kWh 8888 Power kW Display screen	Today/kWh	Today's energy yield.
	Power/kW	Current AC power.
	XXXX	The error code.
Power	Blue Flashing	The inverter is initializing.
	Blue Solid ON	Normally Operating.
	Yellow Solid ON	Warning.
	Red Solid ON	Alarm.
COM	Blue Solid ON	COM Port is using.
	OFF	COM Port is not used.
CT/Meter	Blue Solid ON	CT/Meter Port is using.
	OFF	CT/Meter Port is not used.
Bluetooth	Blue Solid ON	Bluetooth Port is using.
	OFF	Bluetooth Port is not used.

NOTE:
COM/CT/Meter/Bluetooth indicators will automatically turn off after 2 minutes. The Power indicator will remain on with lower brightness.
Shortpress the Power indicator can wake up all indicators.

NOTE:
Long press the Power button for 5 seconds to reset the bluetooth connection passwords. If the reset is successful, the Power button will be flashing in Blue color and in 0.5s interval for 3s. If the reset is failed, the Power button will be flashing in Yellow color and in 0.5s interval for 3s.

4.1 Select a Location for the Inverter

To select a location for the inverter, the following criteria should be considered:

WARNING: Risk of fire

Despite careful construction, electrical devices can cause fires.

- Do not install the inverter in areas containing highly flammable materials or gases.
- Do not install the inverter in potentially explosive atmospheres.
- The mounting structure where the inverter is installed must be fireproof.

- Do not install in small closed spaces where air can not circulate freely. To avoid overheating, always make sure the flow of air around the inverter is not blocked.
- Exposure to direct sunlight will increase the operational temperature of the inverter and may cause output power limiting. Recommends inverter installed to avoid direct sunlight or raining.
- To avoid over heating ambient air temperature must be considered when choosing the inverter installation location. Recommends using a sun shade minimizing direct sunlight when the ambient air temperature around the unit exceeds 104°F/40°C.

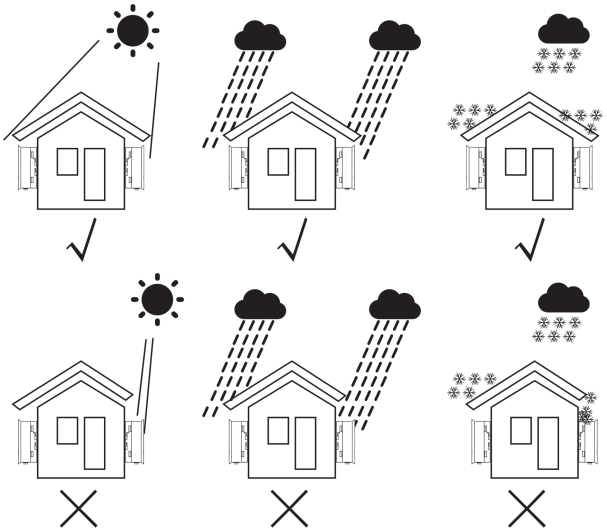

Figure 4.1 Recommended Installation locations

- Install on a wall or strong structure capable of bearing the weight.
- Install vertically with a maximum incline of +/- 5°.If the mounted inverter is tilted to an angle greater than the maximum noted, heat dissipation can be inhibited, and may result in less than expected output power.
- When 1 or more inverters are installed in one location, a minimum 200mm clearance should be kept between each inverter or other object. The top of the inverter should be 300mm clearance and the bottom of the inverter should be 500mm clearance to the ground.

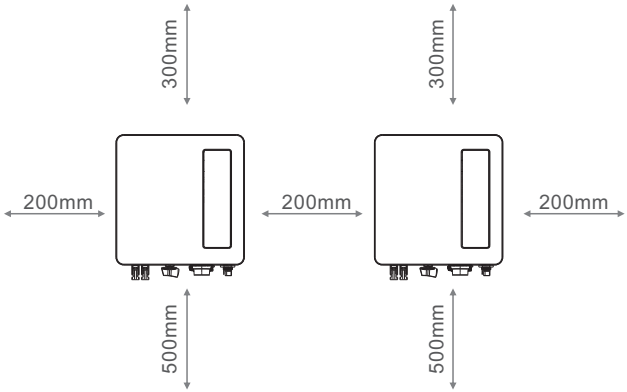

Figure 4.2 Inverter Mounting clearance

- Visibility of the LED status indicator lights.
- Adequate ventilation must be provided if the inverter is to be installed in a confined space.

NOTE:
Nothing should be stored on or placed against the inverter.

4.2 Moving the Inverter

Before installation, remove the inverter from the packing case and move it to the installation site. Follow the instructions below as you move the inverter:

- Always be aware of the weight of the inverter.
- Lift the inverter on both sides of the inverter.
- Move the inverter by one or two people or by using a proper transport tool.
- Do not release the equipment unless it has been firmly secured

NOTE:

Improper handling may cause personal injury!

- Arrange an appropriate number of personnel to carry the inverter according to its weight, and installation personnel should wear protective equipment such as anti-impact shoes and gloves.
- Attention must be paid to the center of gravity of the inverter to avoid tilting during handling.
- Placing the inverter directly on a hard ground may cause damage to its metal enclosure. Protective materials such as sponge pad or foam cushion should be placed underneath the inverter.
- Move the inverter by holding the handles on it. Do not move the inverter by holding the terminals.

4.3 Mounting the Inverter

Dimensions of mounting bracket:

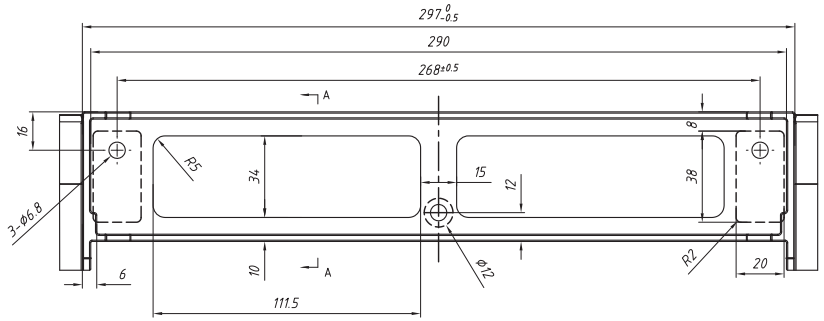

Figure 4.3 Inverter wall mounting

Please see Figure 4.4 and Figure 4.5 for instruction on mounting the inverter..
The inverter shall be mounted vertically. The steps to mount the inverter are listed below.

1. According to the figure 4.2, select the mounting height of the bracket and mark the mounting holes. For brick walls, the position of the holes should be suitable for the expansion bolts.

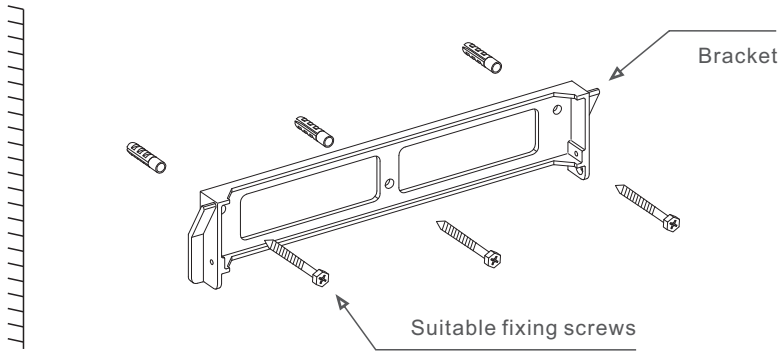

Figure 4.4 Inverter wall mounting

2. Make sure the bracket is horizontal. And the mounting holes (in Figure 4.4) are marked correctly. Drill the holes into wall at your marks.
3. Use the suitable expansion screws to fix the bracket on the wall.

WARNING:
The inverter must be mounted vertically.

4. Lift up the inverter (be careful to avoid body strain), and align the back bracket on the inverter with the convex section of the mounting bracket. Hang the inverter on the mounting bracket and make sure the inverter is secure (see Figure 4.5).

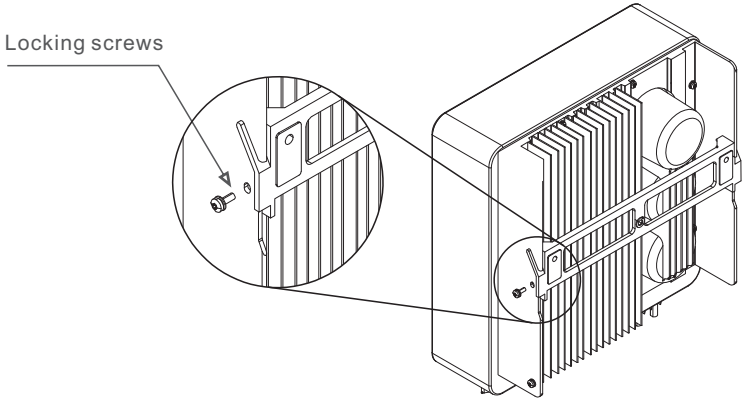

Figure 4.5 Wall Mount Bracket

5. Use M4*9 screws in accessory to lock the inverter to the mount bracket.

4.4 Electrical Connections

Inverter designs quick-connect terminal, so top cover needn't open during electrical connection. The sign meaning located the bottom of inverter, as shown below in table 4.1. All electrical connections are suit for the local or national standard.

+	Positive DC input terminal
-	Negative DC input terminal
DC 1-2	DC input terminal
DC SWITCH	Switch of DC input terminals
COM	Used for Solis data logger(USB)
CT/Meter	Used for smart sensor or smart meter(4pin quick connector)
DRM	RJ45 connector, used for Logic Control(see 4.3.9)
GRID	Connecting terminal of the Grid

Table 4.1 Electrical connection symbols

4.4.1 Connect PV side of inverter

The electrical connection of the inverter must follow the steps listed below:

1. Switch the Grid Supply Main Switch (AC) OFF.
2. Switch the DC Isolator OFF.
3. Assemble PV input connector to the Inverter.

Before connecting inverter, please make sure the PV array open circuit voltage is within the limit of the inverter.

NOTE:
Before connection, please make sure the polarity of the output voltage of PV array matches the“DC+”and“DC-”symbols.

NOTE:
Please use approved DC cable for PV system.

WARNING:
Please don’t connect PV array positive or negative pole to the ground, it could cause serious damages to the inverter.

Please complete the assembling of the DC cable according to below procedures:

Step 1: Choose a proper DC cable and strip about 7+/-0.5mm, refer to the following table for specifications.

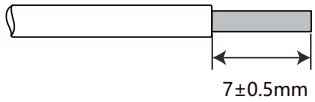

Cable type	Cross section(mm²)	
	Range	Recommended value
Industry generic PV cable (model:PV1-F)	4.0~6.0 (12~10AWG)	4.0(12AWG)

Figure 4.6 Strip

Step 2: take out the DC connector from the accessory bag, rotate the nut to remove it and take out the waterproof rubber ring.

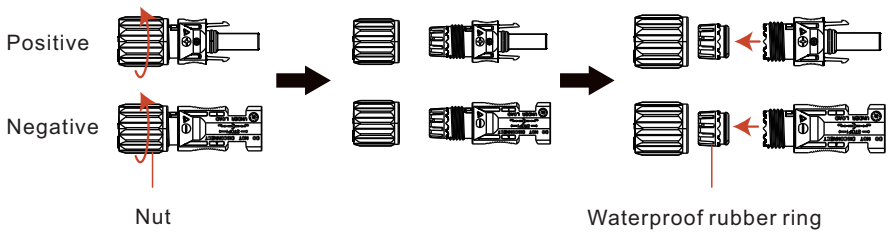

Figure 4.7 Remove the cover of the terminal connector

Step 3: Pass the stripped DC cable through the nut and waterproof rubber ring.

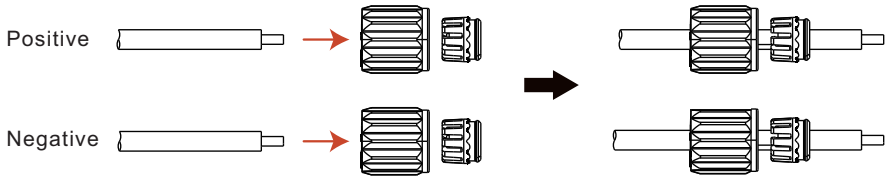

Figure 4.8 Pass the cable trough

Step 4: Connect the conductor part of the DC cable to the metal DC terminal and press it with the DC terminal crimping tool.

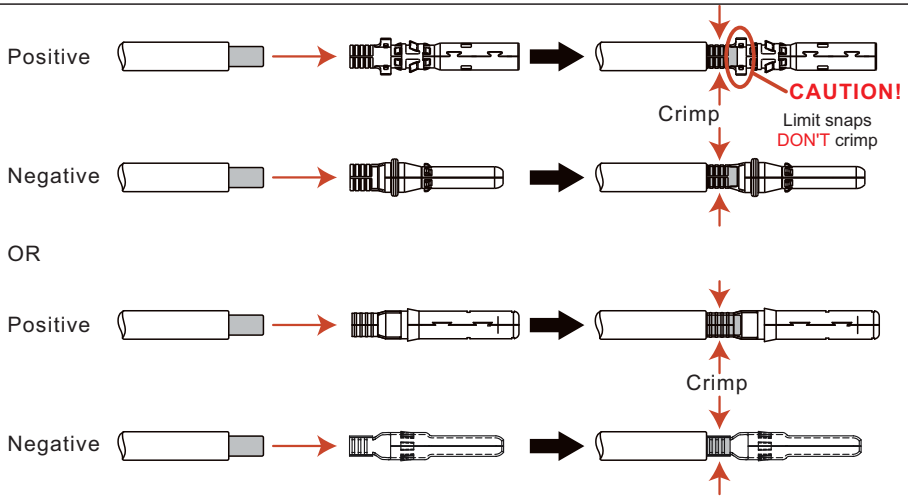

Figure 4.9 Crimp

Step 5: Insert the crimped DC cable firmly into the DC terminal, then insert the waterproof rubber ring into the DC terminal and tighten the nut.

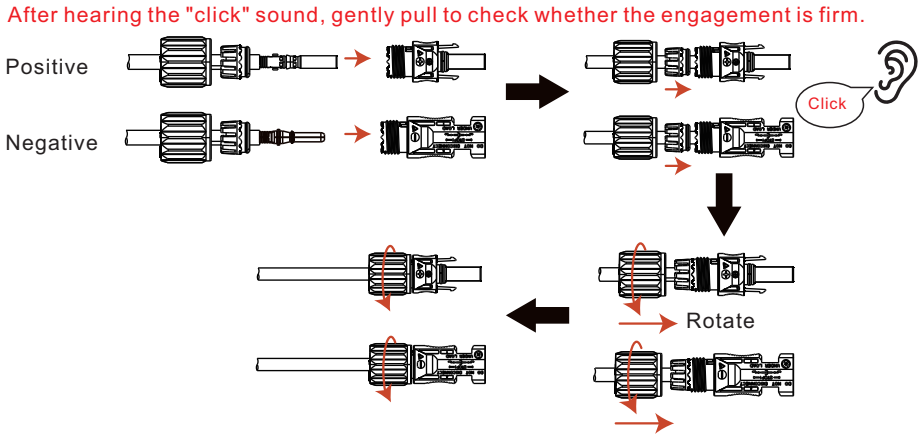

Figure 4.10 Assemble the cover of the terminal connector

Step 6: Use a multimeter to measure the DC input voltage and verify the polarity of the DC input cable.

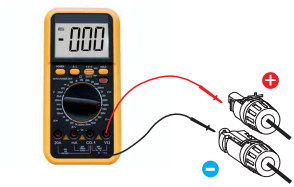

Figure 4.11 multi-meter measurement

Step 7: Connect the assembled DC terminal to the inverter as shown in the figure, and a slight "click" will be heard, proving that the connection is correct.

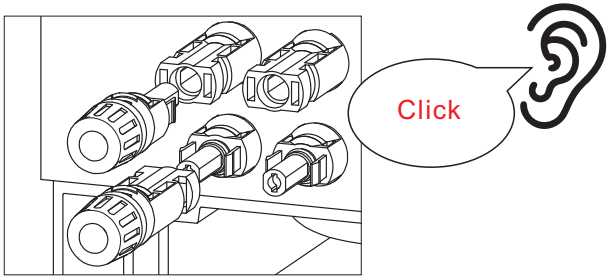

Figure 4.12 connect to the inverter

CAUTION:

If DC inputs are accidently reversely connected or inverter is faulty or not working properly, it is NOT allowed to turn off the DC switch. Otherwise it may cause DC arc and damage the inverter or even lead to a fire disaster.

The correct actions are:

*Use a clip-on ammeter to measure the DC string current.

*If it is above 0.5A, please wait for the solar irradiance reduces until the current decreases to below 0.5A.

*Only after the current is below 0.5A, you are allowed to turn off the DC switches and disconnect the PV strings.

* In order to completely eliminate the possibility of failure, please disconnect the PV strings after turning off the DC switch to aviod secondary failures due to continuous PV energy on the next day.

Please note that any damages due to wrong operations are not covered in the device warranty.

4.4.2 Connect grid side of inverter

There are 2 types of AC connectors. For all AC connections, 4- 6mm^2 cable is required to be used. Please make sure the resistance of cable is lower than 1 ohm. If the wire is longer than 20m, it's recommended to use 6mm^2 cable.

There are"L","N","PE"symbols marked inside the connector, the Line wire of grid must be connected to“L”terminal, the Neutral wire of grid must be connected to "N" terminal and Earth wire must be connected to "PE".

Cable type	Cross section（mm²）	
	Range	Recommended value
Industry generic PV cable	4.0~6.0	6.0

Table 4.2 Grid cable size

4.4.2.1 Type A Connector

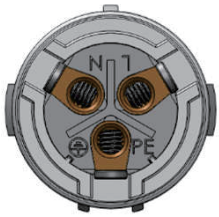

Figure 4.13 AC Grid Terminal Connector Inside

Each Solis S6 Single Phase Inverter is supplied with an AC grid terminal connector.

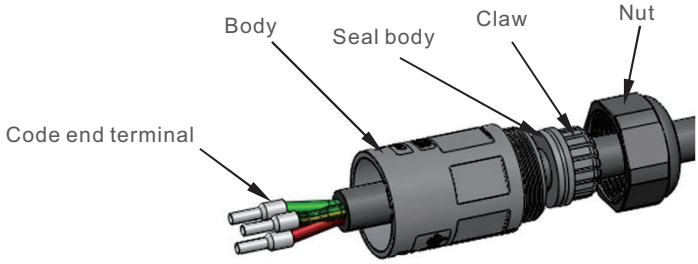

Figure 4.14 AC Grid Terminal Connector

The steps to assemble the AC grid terminal connectors are listed as follows:

1. Disassemble the AC connector. Strip the AC wires about 7mm.

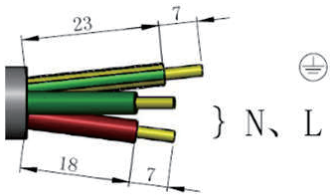

Figure 4.15 Stripped AC Wires

2. Fix the wires into the correct postion. Torque 0.8N.m
   Please try to pull out the wire to make sure the it's well connected.

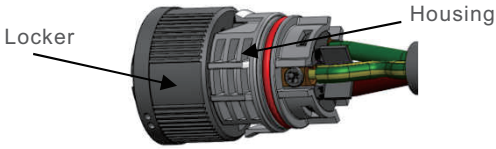

Figure 4.16 Connect Wires to the Terminal

3. Insert Seal and Clamp Finger into body ,then tighten the nut, torque 2.5+/-0.5N·m.

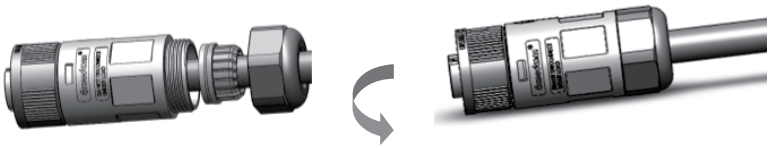

Figure 4.17 Tighten up the Cap on the Terminal

4. Mating plug and socket:
Push the locker onto the socket housing completely, then rotate the locker according to the direction instructed by the marks on the locker.(Warning:hold the body)

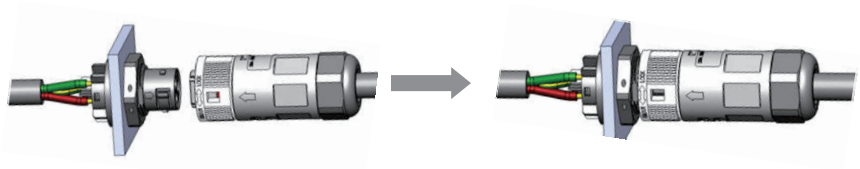

Figure 4.18 Connect the AC Connector to the Inverter

4.4.2.2 Type B Connector

1. Remove the cable plug with special tool provided.

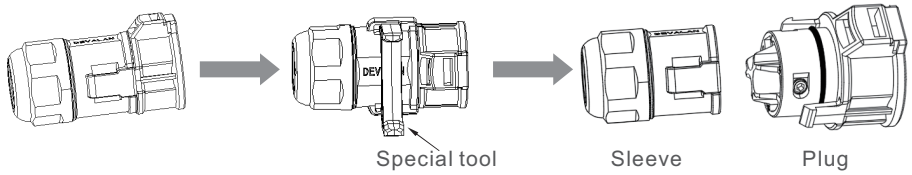

Figure 4.19 Remove the cable plug

2. Release the lock nut, and run the cable into the sleeve.

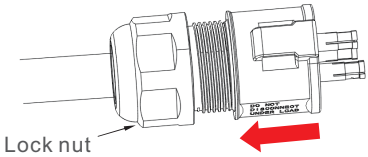

Figure 4.20 Run the cable into the sleeve

3. Fix the wires into the correct position of the plug. Lock the screw(torque 0.7~1.0 N·m). Please try to pull out the wire to make sure it's well connected.

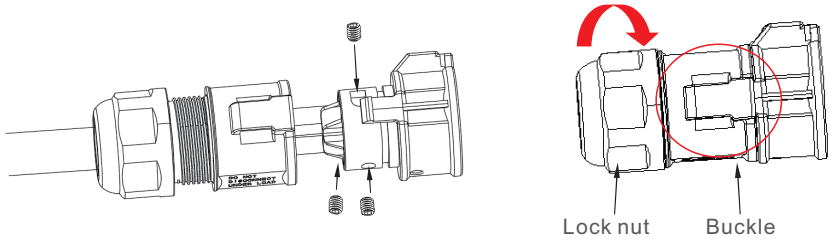

Figure 4.21 Connect wires to the terminal

4. Insert the plug into the sleeve, and lock through the buckle.
Twist the lock nut (torque 3~4 N·m).

5. Insert the plug assembly into the socket (inverter end), lock each other tightly through the buckle (a slight “click” is heard, providing that the lock is correct.).

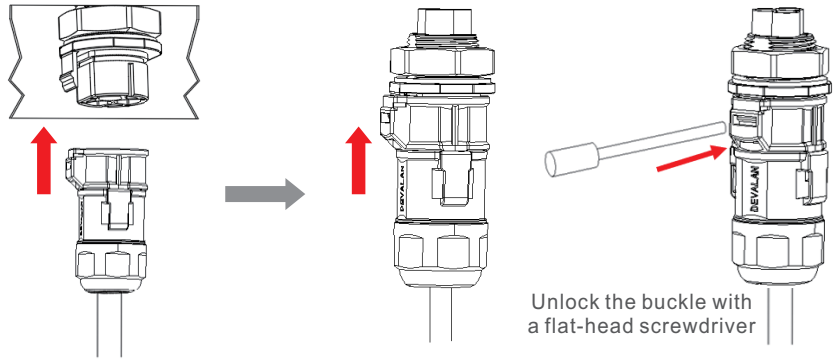

Figure 4.22 Connect the AC connector to the inverter

NOTE: Connection for Split phase grid.
When connect to 208/220/240V split phase, please connect L1 to “L” terminal, L2 to “N” terminal. Also connect earth to ground terminal.

4.4.3 External ground connection

An external ground connection is provided at the right side of inverter.
Prepare OT terminals: M4. Use proper tooling to crimp the lug to the terminal.
Connect the OT terminal with ground cable to the right side of inverter. The torque is 2N.m.

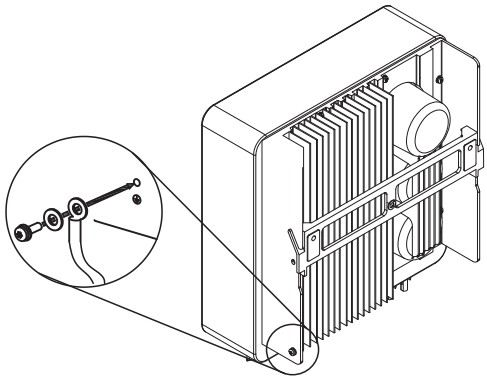

Figure 4. 23 Connect the external grounding conductor

4.4.4 Max. over current protection device (OCPD)

To protect the inverter's AC grid connection conductors, Solis recommends installing breakers that will protect against overcurrent. The following table defines OCPD ratings for the Solis S6 Single Phase Inverters.

Inverter	Rated output voltage(V)	Rated output current (A)	Current for protection device (A)
S6-GR1P3K-S(21A)	230	13.0	20
S6-GR1P3.6K-S(21A)	230	15.7	20
S6-GR1P4K-S(21A)	230	17.4	25
S6-GR1P4.6K-S(21A)	230	20.0	32
S6-GR1P5K-S(21A)	230	21.7	32
S6-GR1P6K-S(21A)	230	26.1	40

Table 4.3 Rating of grid OCPD

4.4.5 Inverter monitoring connection

The inverter can be monitored via Wi-Fi or GPRS. All Solis communication devices are optional (Figure 4.24). For connection instructions, please refer to the Solis Monitoring Device installation manuals.

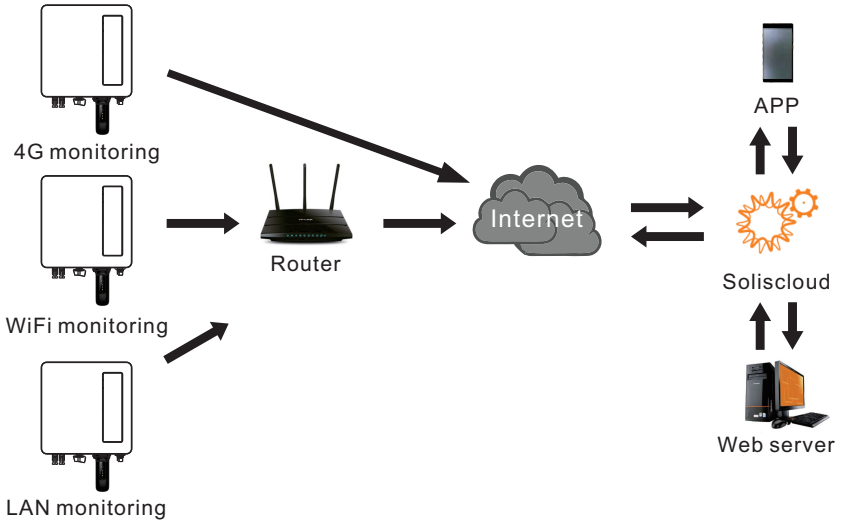

Figure 4.24 Communication function

4.4.6 Electrical connection diagram

Refer to figure 4.25, which is a simple guidance for installing a solar system with PV inverter. A DC isolator is required to be installed in the system between PV panels and the inverter.

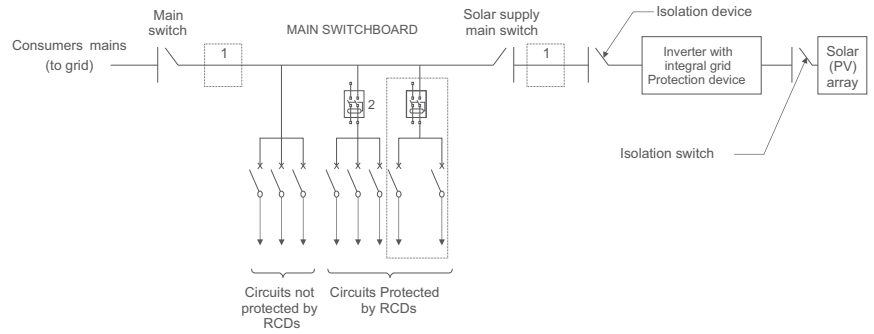

Figure 4.25 Guidance for a Simple Installation of an Inverter Solar Energy System

1. The RCD should be in parallel connection between the consumers mains and the solar supply.
2. More than one RCD may be used. Each RCD can protect one or more circuits.

4.4.7 Meter Connection(optional)

The inverter can work with a single phase smart meter to achieve Export Power Management function and/or 24hour consumption monitoring function.

NOTE:
CT/Meter Model can connect either a smart meter or a smart sensor with a 4-pin connector. Please consult Solis Sales Rep before placing the order.

NOTE:
To achieve Export Power Management function, the smart meter can be installed on either grid side or load side. To achieve 24hour consumption monitoring function, the smart meter can only be installed on grid side.

Three types of meters are supported:
Direct Insert Type Meter - Max input current 60A (Model:DDSD1352-C)
External CT Type Meter 1 - 120A/40mA CT is supplied (Model: ACR10RD16TE)
External CT Type Meter 2 - 100A/100mA CT is supplied(Model: SDM120CT)
Customer can place the order for a suitable meter from Solis Sales Reps.
Below are the pin definitions of the meter cable connector.

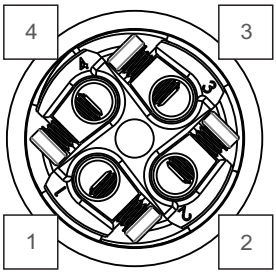

Pin	Definition
3	Meter RS485-A
4	Meter RS485-B

Figure 4.26

Below are the connection diagrams of different meters connecting to different locations.

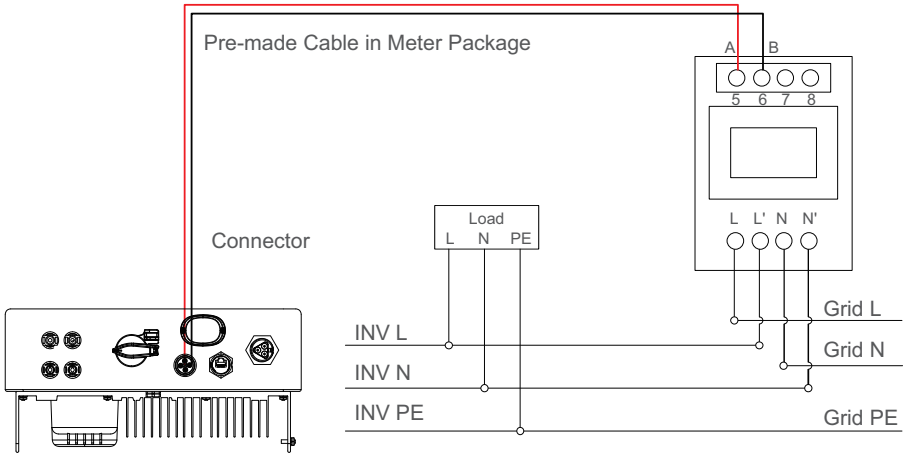

Figure 4.27 (DDSD1352-C) Direct Insert Type Meter - “Meter in Grid”

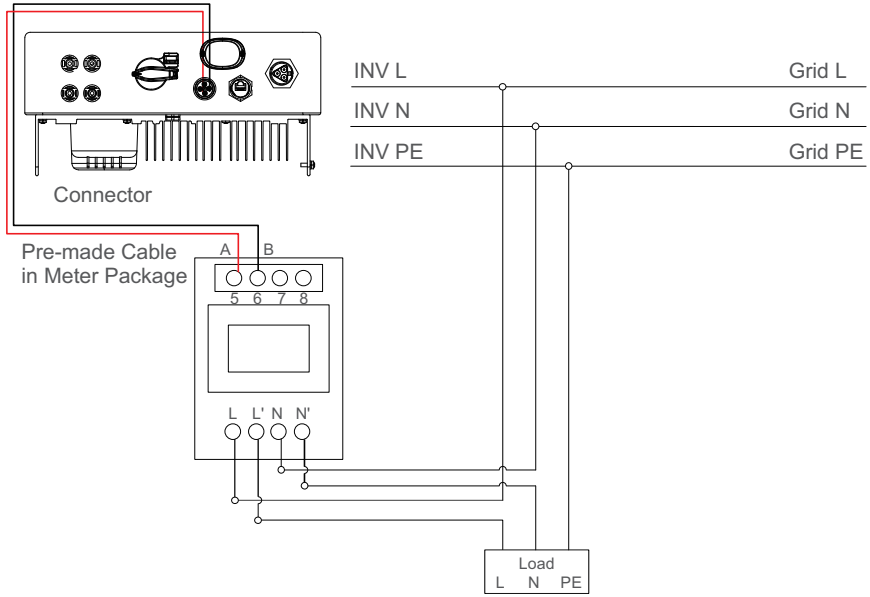

Figure 4.28 (DDSD1352-C) Direct Insert Type Meter - “Meter in Load”

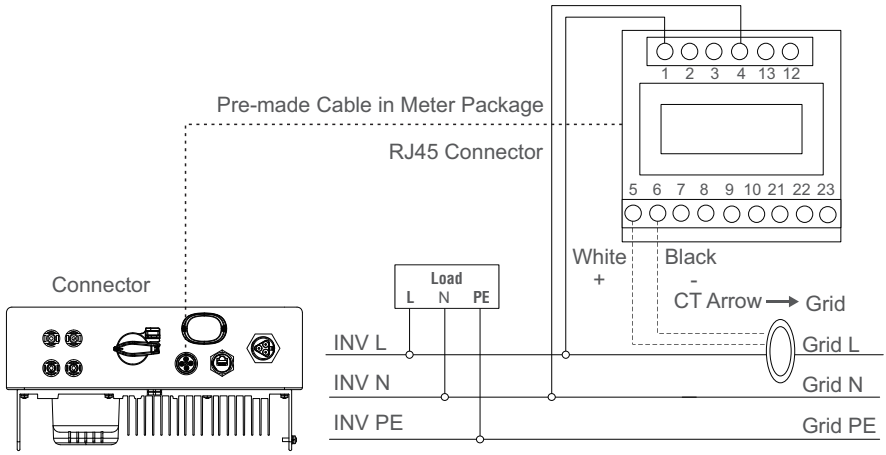

Figure 4.29 (ACR10RD16TE) External CT Type Meter - “Meter in Grid”

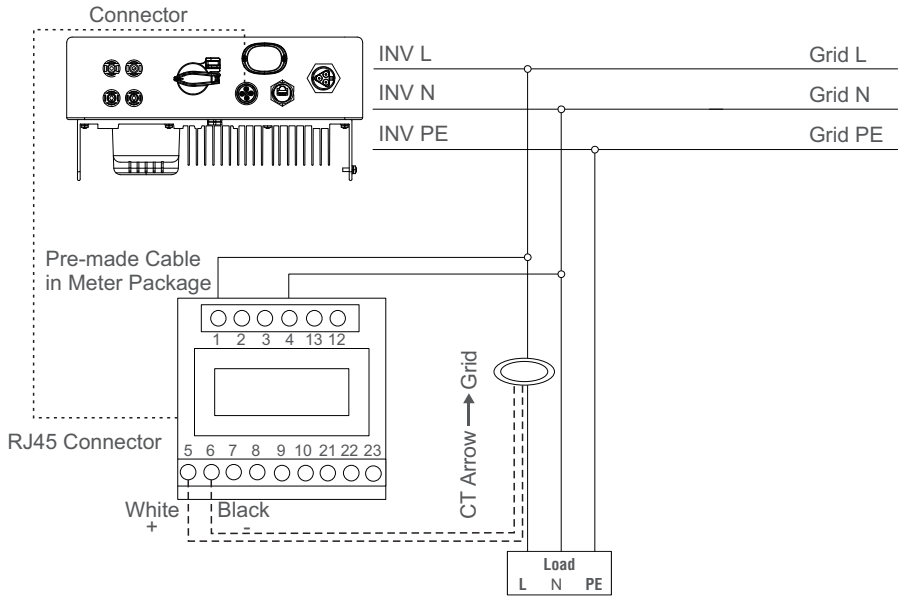

Figure 4.30 (ACR10RD16TE) External CT Type Meter - “Meter in Load”

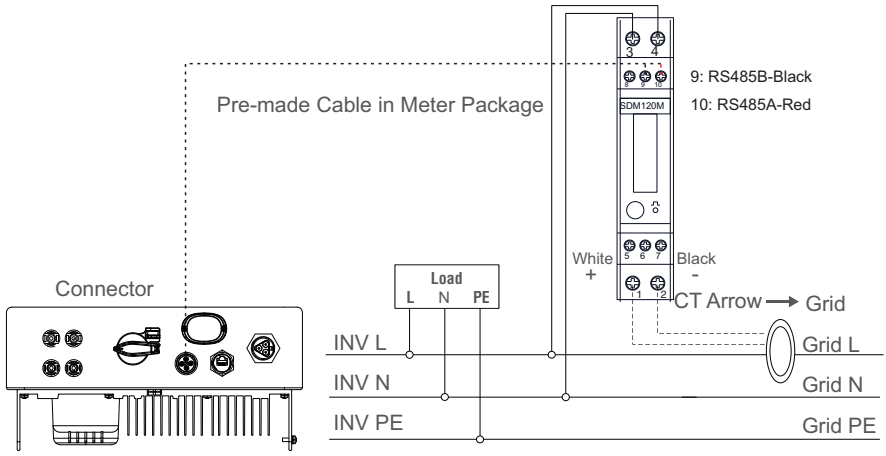

Figure 4.31 (SDM120CT) External CT Type Meter - “Meter in Grid”

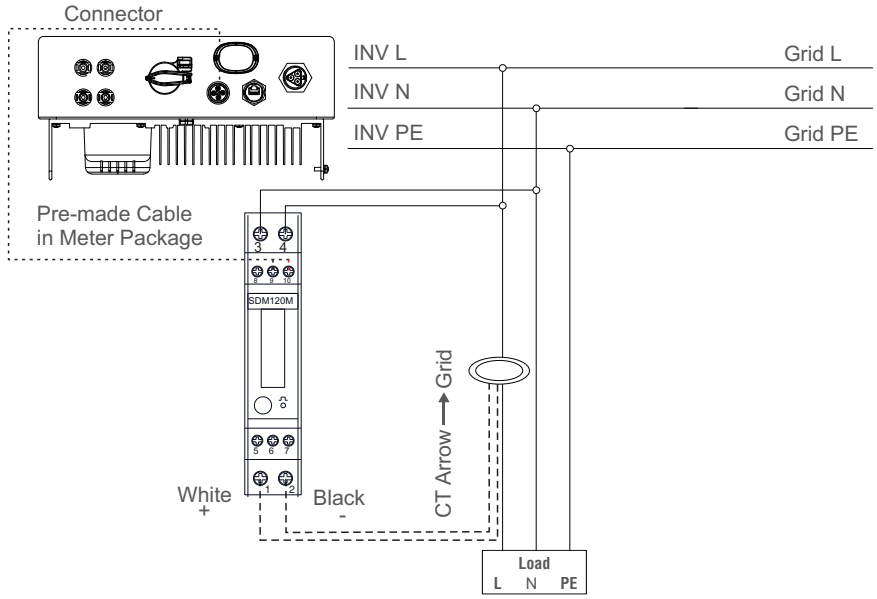

Figure 4.32 (SDM120CT) External CT Type Meter - “Meter in Load”

4.4.8 CT connections(optional)

The inverter can work with a smart sensor to achieve Export Power Management function and/or 24 hour consumption monitoring function.
CT Model: CTSA016-100A/33.33mA

NOTE:
CT/Meter Model can connect either a smart meter or a smart sensor with a 4-pin connector. Please consult Solis Sales Rep before placing the order.

NOTE:
To achieve Export Power Management function and/or 24 hour consumption monitoring function, the smart sensor must be installed on the grid side.

Below are the pin definitions of the smart sensor cable connector.

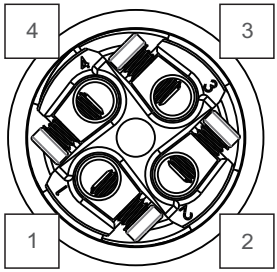

Pin	Definition	Colour
1	CT1	Red
2	CT2	Black

Figure 4.33

Below is the connection diagram of the smart sensor.

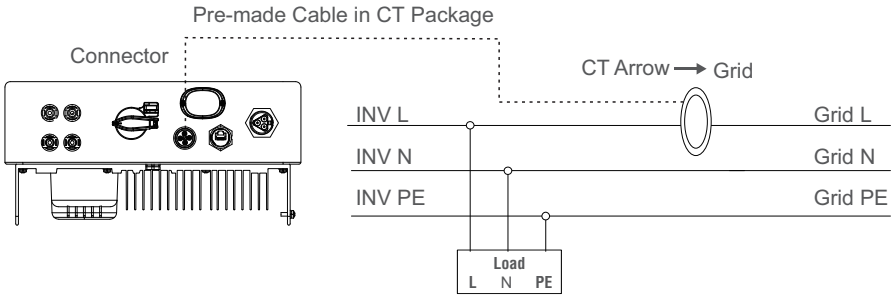

Figure 4.34 Smart Sensor

4.4.9 DRED port connections

DRED means demand response enable device. The AS/NZS 4777.2:2020 required inverter need to support demand response mode(DRM). This function is for inverter that comply with AS/NZS 4777.2:2020 standard.

A RJ45 terminal is used for DRM connection.

Pin	Assignment for inverters capable of both charging and discharging	Pin	Assignment for inverters capable of both charging and discharging
1	DRM 1/5	5	RefGen
2	DRM 2/6	6	Com/DRM0
3	DRM 3/7	7	V+
4	DRM 4/8	8	V-

NOTE:

Solis inverter is designed to provide 12V power for DRED.

Please follow below steps to assemble RJ45 connector.

1.Insert the network cable into the communication connection terminal of RJ45.

Figure 4.35 RJ45 communication connection terminals

2.Use the network wire stripper to strip the insulation layer of the communication cable. According to the standard line sequence of figure 4.36 connect the wire to the plug of RJ45, and then use a network cable crimping tool to make it tight.

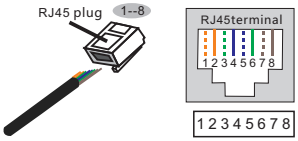

Correspondence between the cables and the stitches of plug

Pin 1: white and orange ; Pin 2: orange
Pin 3: white and green; Pin 4: blue
Pin 5: white and blue; Pin 6: green
Pin 7: white and brown; Pin 8: brown

Figure 4.36 Strip the insulation layer and connect to RJ45 plug

3.Connect RJ45 to DRM port.

4.4.10 External Residual Current Device(RCD)

All series of Solis inverters are integrated with an internal residual current device to protect against any potential d.c component and a.c component of residual current. Therefore, all Solis inverters, due to the design, are not able to feed in DC fault current to the system which fully complies with IEC60364-7-712.
If an external RCD is required to be installed by local regulations, Solis recommends installing a Type-A RCD with a threshold current higher than 100mA.

4.4.11 Earth Fault Alarm

Solis inverters fully comply with IEC62109-2 in terms of earth fault alarm (PV insulation detection and protection). When the earth fault on PV side happens, the red alarm indicator will be solid on and the alarm code "PVISO-PRO" will show up on the APP.

Inverter should be installed in a high traffic area to ensure the alarm to be noticed.
The inverter can’t start to generate until the earth fault is resolved. Please refer to the troubleshooting section of this manual to resolve the earth fault or contact Solis service team for help.

5. Commissioning

5.1 Preparation

- Ensure all the devices are accessible for operation, maintenance and service.
- Check and confirm that the inverter is firmly installed.
- Space for ventilation is sufficient for one inverter or multiple inverters.
- Nothing is left on the top of the inverter.
- Inverter and accessories are correctly connected.
- Cables are routed in safe place or protected against mechanical damage.
- Warning signs and labels are suitably affixed and durable.
- An Android or IOS mobile phone with Bluetooth function is available.
- Measure DC voltage of PV strings and ensure the polarity is correct.
- Measure AC voltage and frequency and ensure they are within local standard.

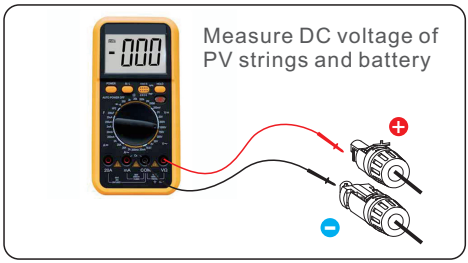

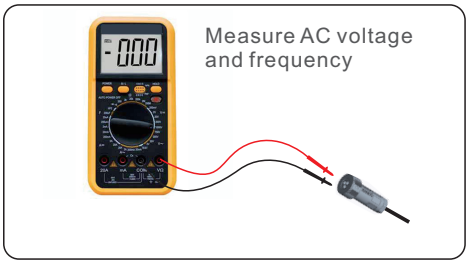

5.2 APP Download

Users need to download the APP before installing it for the first time.
There are three ways to download and install the latest APP:

1. You can visit **www.soliscloud.com** to download the latest version APP.
2. You can search "**Soliscloud**" in Google Play or App Store.
3. You can scan this QR code below to download "**Soliscloud**".

5.3 Log in the APP via bluetooth

Step 1: **Connect with Bluetooth.**

Turn on Bluetooth switch on your mobile phone and then open the Soliscloud APP.

Click “More Tools”->”Local Operation”->”Connect with Bluetooth”

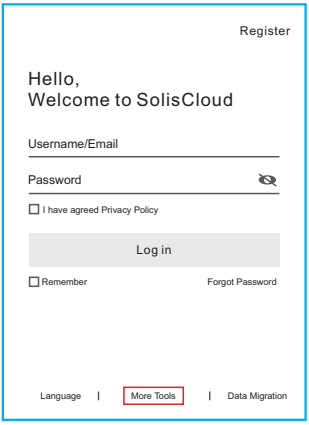

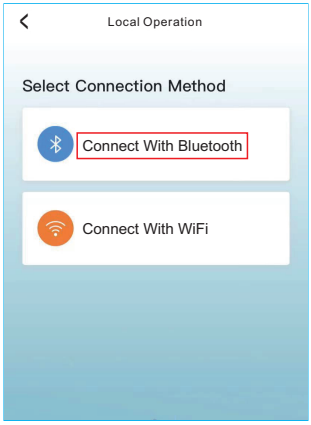

Step 2: Select the Bluetooth signal from the inverter.
(Bluetooth Name: INV-Inverter SN)

Step 3: **Login account.**

If you are the installer, please select the account type as Installer. If you are the plant owner, please select the account type as owner. Then set your own initial password for control verification. (The first log-in must be finished by installer in order to do the initial set up)

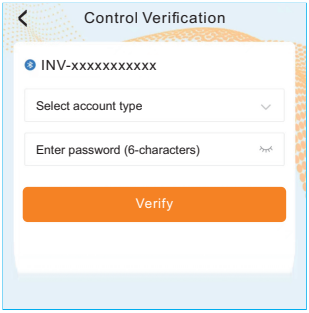

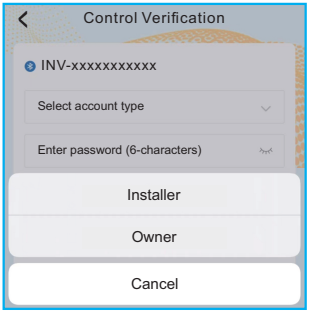

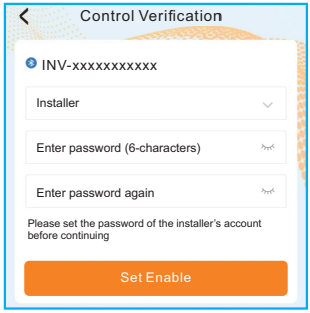

Step 4: Perform the setting configuration for Grid CodeSetting, etc.

5.4 Start the Inverter

To start up the Inverter, it is important that the following steps are strictly followed:

1. Switch the DC switch ON. If the voltage of PV arrays are higher than start up voltage, the inverter will turn on. The Power indicator will be red solid on.
2. Switch the grid supply main Switch (AC) ON.
3. When both the DC and the AC sides supply to the inverter, it will be ready to generate power. Initially, the inverter will check both its internal parameters and the parameters of the AC grid, to ensure that they are within the acceptable limits. At the same time, the Power indicator will be blue flashing.
4. After 30-300 seconds (depending on local requirement), the inverter will start to generate power. The Power indicator will be blue solid on.

WARNING:
Do not touch the surface when the inverter is operating. It may be hot and cause burns.

5.5 Stop the Inverter

To stop the inverter, it is mandatory that the steps below are followed in the exact order outlined.

1. Select "Power OFF" in the APP.
2. Turn off the AC Switch between Solis inverter and Grid.
3. Wait approximately 30 seconds (during this time, the AC side capacitors are dissipating energy). If the inverter has DC voltage above the start-up threshold, the POWER indicator will be red solid on. Switch the DC switch OFF.
4. Confirm all LED's switch OFF (~one (1) minute).

CAUTION
Although the inverter DC switch is in the OFF position and all the LED's are OFF, operators must wait five (5) minutes after the DC power source has been disconnected before opening the inverter cabinet. DC side capacitors can take up to five (5) minutes to dissipate all stored energy.

5.6 Australian Grid Code Settings

Customers can follow the quick setting process to select the corresponding grid codes based on AS/NZS 4777.2:2020 Amd 2:2024 (4777-A/ 4777-B/ 4777-C/ 4777-N).
Or modify the grid code in following path in the APP:
Settings -> Grid Parameter Setting -> Grid Code Setting

NOTE:
The standard code selection “4777-A”, “4777-B”, “4777-C” and “4777-N” already have preset default settings as required by AS/NZS 4777.2:2020 Amd 2:2024. Unless specially required, customers do not need to gain access to the following sections or modify any settings inside. When “4777-C” is selected, the upper connection and reconnection frequency(fURF), is 50.50 Hz.

Region	Australia A	Australia B	Australia C	New Zealand	
Standard Code Name	4777-A	4777-B	4777-C	4777-N	Setting Range
OV-G-V1	265V	265V	265V	265V	230-310.5V
OVGV1-T	1.5S	1.5S	1.5S	1.5S	0.01-650S
OV-G-V2	275V	275V	275V	275V	230-310.5V
OVGV2-T	0.1S	0.1S	0.1S	0.1S	0.01-650S
UN-G-V1	180V	180V	180V	180V	0-230V
UNGV1-T	10S	10S	10S	10S	0.01-650S
UN-G-V2	70V	70V	70V	70V	0-230V
UNGV2-T	1.5S	1.5S	1.5S	1.5S	0.01-650S
OV-G-F1	52HZ	52HZ	55HZ	55HZ	50-55HZ
OVGF1-T	0.1S	0.1S	0.1S	0.1S	0.01-650S
OV-G-F2	52HZ	52HZ	55HZ	55HZ	50-55HZ
OVGF2-T	0.1S	0.1S	0.1S	0.1S	0.01-650S
UN-G-F1	47HZ	47HZ	45HZ	45HZ	45-50HZ
UNGF1-T	1.5S	1.5S	5S	1.5S	0.01-650S
UN-G-F2	47HZ	47HZ	45HZ	45HZ	45-50HZ
UNGF2-T	1.5S	1.5S	5S	1.5S	0.01-650S
Startup-T	60S	60S	60S	60S	0-1800S
Restore-T	60S	60S	60S	60S	0-1800S
Recover-VH	253V	253V	253V	253V	230-310.5V
Recover-VL	205V	205V	205V	196V	92-230V
Recover-FH	50.15Hz	50.15Hz	50.50Hz	50.15Hz	50-52Hz
Recover-FL	47.5Hz	47.5Hz	47.5Hz	47.5Hz	47-50Hz
Start-VH	253V	253V	253V	253V	230-310.5V
Start-VL	205V	205V	205V	196V	92-230V
Start-FH	50.15Hz	50.15Hz	50.50Hz	50.15Hz	50-55Hz
Start-FL	47.5Hz	47.5Hz	47.5Hz	47.5Hz	45-50Hz

5.6.1 Working Mode Set

Solis AU version inverters have the following working mode settings:

1. Null
2. Volt-Watt
3. Volt-Var
4. Fixed PF
5. Fixed Reactive

The setting path in the APP is:
Settings-> Inverter Work Mode Setting -> Work Mode

1. NULL

Inverter will not be under any working mode.

2. Volt-Watt

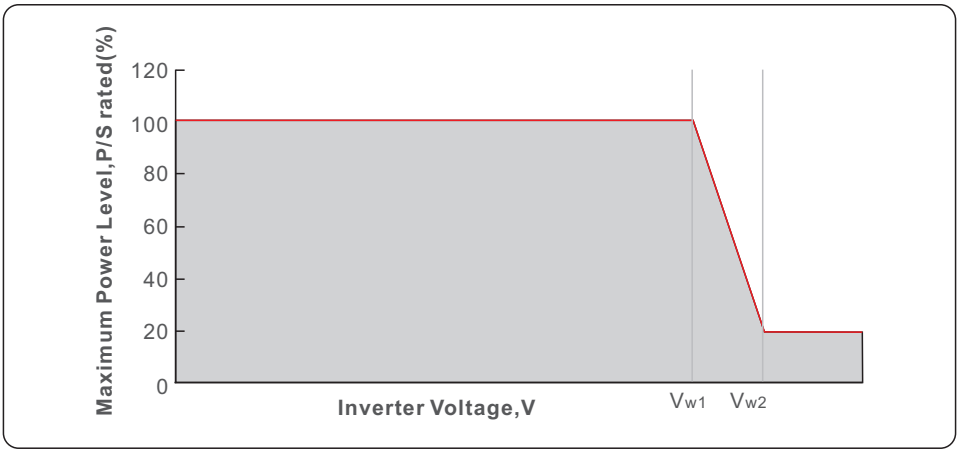

Status: Enable/Disable (Note: This is used to enable or disable the Volt-Watt mode)
Voltage 1: 207V
P-Limit 1: 100%
Voltage 2: 230V
P-Limit 2: 100%
Voltage 3 (Vw1):
230-310.5V (Default: 4777-A(253V); 4777-B(250V);4777-C(253V);4777-N(242V))
P-Limit 3: 100%
Voltage 4 (Vw2):
230-310.5V (Default: 4777-A(260V); 4777-B(260V);4777-C(260V);4777-N(250V))
P-Limit 4: 0%-20% (Default: 20% for 4777-A; 4777-B; 4777-C; 4777-N)

3. Volt-Var

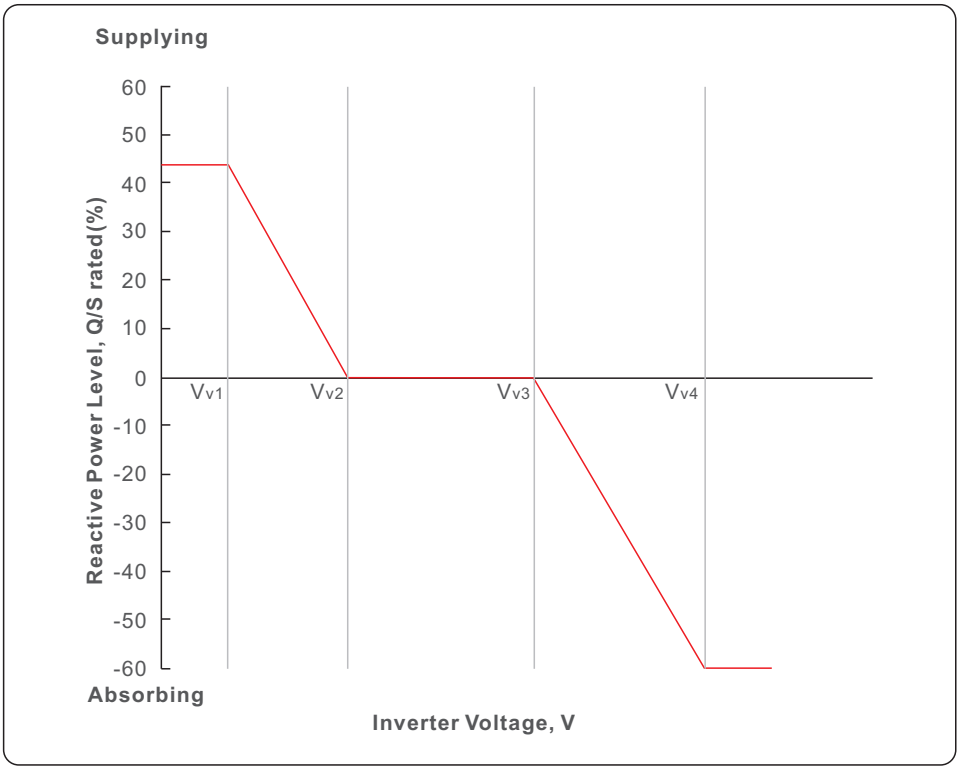

Voltage 1 (Vv1):
0-241.5V (Default: 4777-A(207V); 4777-B(205V);4777-C(215V);4777-N(207V))
Voltage 2(Vv2) :
0-241.5V (Default: 4777-A(220V); 4777-B(220V);4777-C(230V);4777-N(220V))
Voltage 3(Vv3) :
218.5-310.5V (Default: 4777-A(240V); 4777-B(235V);4777-C(240V);4777-N(235V))
Voltage 4(Vv4) :
218.5-310.5V (Default: 4777-A(258V); 4777-B(255V);4777-C(255V);4777-N(244V))
Leading(Supplying) :
0~+60% (Default: 4777-A(+44%); 4777-B(+30%);4777-C(+44%);4777-N(+60%))
Lagging(Absorbing) :
-60%~0% (Default: 4777-A(-60%); 4777-B(-40%);4777-C(-60%);4777-N(-60%))

4. Fixed PF
To set a fixed power factor output
Range: -0.8~+0.8
Default: 1

5. Fixed Reactive
To set a fixed reactive power output
Range:-60%~+60%
Default: 0%

5.6.2 Power Rate Limit

Settings-> Inverter Setting -> Inverter Power Setting ->Power Limit
To set the power rate limits for increase and decrease in power level per minute.
Wgra+: 5-600%, Default:16.67%
Wgra-: 5-600%, Default:16.67%

5.6.3 Freq Derate Set

Settings-> Frequency Derating Setting
To set the frequency response limits for response to a decrease/increase in frequency.
OVF_Start(F_ULCO): 50Hz~55Hz
(Default: 4777-A(50.25Hz), 4777-B(50.15Hz), 4777-C(50.5Hz), 4777-N(50.2Hz))
OVF_Stop(F_Pmin): 50Hz~55Hz
(Default: 4777-A(52Hz), 4777-B(52Hz), 4777-C(53Hz), 4777-N(52Hz))
UNF_Start(F_LLCO): 45Hz~50Hz
(Default: 4777-A(49.75Hz), 4777-B(49.85Hz), 4777-C(49.5Hz), 4777-N(49.8Hz))
UNF_Stop(F_Pmax): 45Hz~50Hz
(Default: 4777-A(48Hz), 4777-B(48Hz), 4777-C(47Hz), 4777-N(48Hz))

5.6.4 10mins Voltage Set

Settings ->Grid Parameter Setting -> Grid Code Setting -> 10min Overvoltage Setting
To set the 10mins average protection limit.
Range: 230V to 310.5V
Default: 4777-A (258V); 4777-B(258V); 4777-C(258V); 4777-N(249V)

5.6.5 DRM Settings

Settings->Inverter Setting -> Inverter Function Setting -> Logic Interface Setting
“DRM ON/OFF” is used to enable or disable the functionality of the DRM port.

5.7 Export Power Control

Built-in EPM is for PV plant with only 1 inverter, while External EPM for multiple inverters.

5.7.1 Built-in EPM Setting

Select “Settings -> EPM Setting -> Built-in EPM Setting” to make the settings.
The Built-in EPM includes 2 functions related to the smart meter or smart sensor.

NOTE:

Function 1: Export Power Management Function

1. Inverters can work with a smart meter OR a smart sensor to dynamically limit the export power of the system.
2. Zero injection can be achieved.
3. Smart meter can be installed either on the grid side OR the load side. Smart sensor can only be installed on the grid side.

Function 2: 24-Hour Load Monitoring Function

1. Only applicable if Solis monitoring system is used.
2. Inverters can work with a smart meter OR smart sensor to monitor the load consumption data for the whole day and the data will be displayed on the Solis monitoring system.
3. Smart meter or smart sensor can only be installed on the grid side.

NOTE:

Please refer to below instructions for different user scenarios.

Scenario 1. Only Function 1 is required

Using a Smart Meter:

Step 1: Refer to Section 4.3.7 to connect the smart meter on the grid side or load side.
Step 2: Select the corresponding meter model in the **Meter Selection**.
Step 3: Choose **Meter in Grid Mode** or **Meter in Load Mode** in the **Built-in EPM mode selection** accordingly.
Step 4: Configure the **System Export Power Limit Value** to set the allowed backflow power.
Step 5: Configure the **Built-in EPM Failsafe Switch** to enable the failsafe function (If necessary).

Using a Smart Sensor:

Step 1: Refer to Section 4.3.8 to connect the smart sensor on the grid side.
Step 2: Select the **CT Sensor Mode** in the **Built-in EPM mode selection**.
Step 3: Configure the **CT Ratio** and **CT Direction** at the “**Settings -> EPM Setting -> CT Setting**”. (If necessary).
Step 4: Configure the **System Export Power Limit Value** to set the allowed backflow power.
Step 5: Configure the **Built-in EPM Failsafe Switch** to enable the failsafe function (If necessary).

NOTE:

Please refer to below instructions for different user scenarios.

Scenario 2. Only Function 2 is required

Using a Smart Meter:

Step 1: Refer to Section 4.3.7 to connect the smart meter on the grid side.

Step 2: Select the corresponding meter model in the **Meter Selection**.

Step 3: Choose **Meter 24-Hour Monitoring Mode** in the **Built-in EPM mode selection** accordingly.

Step 4: Enable the **24-Hour Load Monitoring** function at "**Settings -> Inverter Setting -> Inverter Function Setting**".

Using a Smart Sensor:

Step 1: Refer to Section 4.3.8 to connect the smart sensor on the grid side.

Step 2: Select the **CT load Monitoring Mode** in the **Built-in EPM mode selection**.

Step 3: Configure the **CT Ratio** and **CT Direction** at the "**Settings -> EPM Setting -> CT Setting**". (If necessary).

Step 4: Enable the **24-Hour Load Monitoring** function at "**Settings -> Inverter Setting -> Inverter Function Setting**".

NOTE:
Please refer to below instructions for different user scenarios.
Scenario 3. Both Function 1 and 2 are required
Using a Smart Meter:
Step 1: Refer to Section 4.3.7 to connect the smart meter on the grid side.
Step 2: Select the corresponding meter model in the **Meter Selection**.
Step 3: Choose **Meter in Grid Mode** in the **Built-in EPM mode selection** accordingly.
Step 4: Configure the **System Export Power Limit Value** to set the allowed backflow power.
Step 5: Configure the **Built-in EPM Failsafe Switch** to enable the failsafe function (If necessary).
Step 6: Enable the **24-Hour Load Monitoring** function at "**Settings -> Inverter Setting -> Inverter Function Setting**".
Using a Smart Sensor:
Step 1: Refer to Section 4.3.8 to connect the smart sensor on the grid side.
Step 2: Select the **CT Sensor Mode** in the **Built-in EPM mode selection**.
Step 3: Configure the **CT Ratio** and **CT Direction** at the "**Settings -> EPM Setting -> CT Setting**". (If necessary).
Step 4: Configure the **System Export Power Limit Value** to set the allowed backflow power.
Step 5: Configure the **Built-in EPM Failsafe Switch** to enable the failsafe function (If necessary).
Step 6: Enable the **24-Hour Load Monitoring** function at "**Settings -> Inverter Setting -> Inverter Function Setting**".

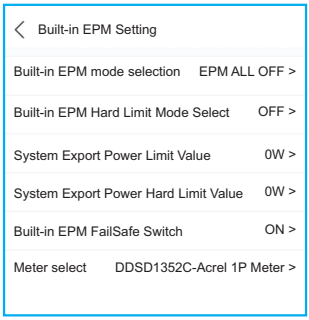

Setting	Description
Built-in EPM mode	6 built-in EPM mode is optional. Choose the appropriate mode needed.
Built-in EPM Hard Limit Mode Select	Enable/Disable the export power control hard limit.
System Export Power Limit Value	Set the permissible PV plant export power to the gird.
System Export Power Hard Limit Value	The hard export power limit. If the **Built-in EPM Hard Limit Mode Select** is enabled and hard limit value is reached, inverter will shut down within 5s and give alarm as “EPM-Hard Limit”
Built-in EPM Failsafe Switch	When G100 standard is used, this switch is enabled by default.
Meter Select	Select the meter model according to the actual installation.

There are 6 modes for Built-in EPM.

1. EPM ALL OFF. Built-in EPM function is disabled.

2. CT Sensor Mode. Solis Smart Sensor is connected in the grid connection point (The **System Export Power Limit Value** setting is applicable, default value is 0W).

3. Meter in Grid Mode. Solis Smart Meter is connected in the grid connection point (The **System Export Power Limit Value** setting is applicable, default value is 0W).

4. Meter in Load Mode. Solis Smart Meter is connected in the load branch circuit (The **System Export Power Limit Value** setting is applicable, default value is 0W).

5. Meter 24-Hour Monitoring Mode. Solis Smart Meter is connected in the grid connection point(used for 24h load monitoring only, the **System Export Power Limit Value** setting is not applicable).

6. CT load Monitoring Mode. Solis Smart Sensor is connected in the grid connection point (used for 24h load monitoring only, the **System Export Power Limit Value** setting is not applicable).

5.7.2 External EPM Setting

Select "**Settings -> EPM Setting -> External EPM Setting**".
External EPM Failsafe Swtich should be turned ON when external EPM device is used.

5.8 AFCI Setting

Settings-> Inverter Setting -> Inverter Function Setting -> AFCI Setting
"AFCI Protect" is used to enable the inverter AFCI function ON/OFF.
"Arc-Fault Manual Reset" is used to make a manual reset operation. When Arc-Fault error happens more than 5 times, the inverter will stop generating. Users have to check the inverter DC side wire connection is OK and then make a manual reset.

5.9 MPPT Multi-peak Scanning Setting

Settings-> Inverter Setting -> Inverter Function Setting -> MPPT Multi-peak Scanning Setting
"MPPT Multi-peak Scanning Switch" is used to enable the MPPT Multi-peak Scanning function ON/OFF.
"MPPT Multi-peak Scan Interval" is used to set the scanning interval. The inverter will carry out Multi-peak MPPT scanning 1 time every scanning interval.

6. Operation

The APP interface contains 4 sections:

1. Home
2. Info
3. Alarm
4. Settings

6.1 Home Page

The home page contains the power and energy data of the inverter.
The PV data and AC data are also available under this section.

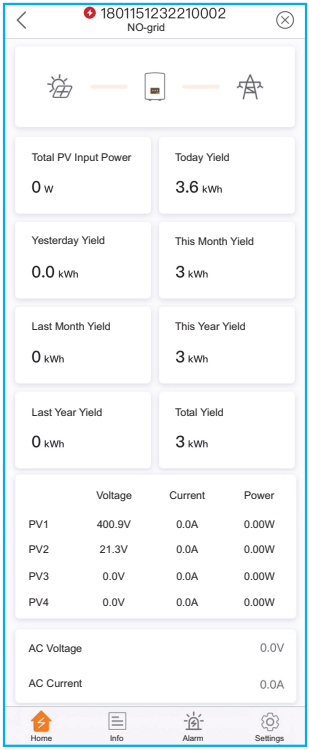

6.2 Info Page

Info page displays the general information of the inverter such as inverter serial number, firmware version, grid code, etc.

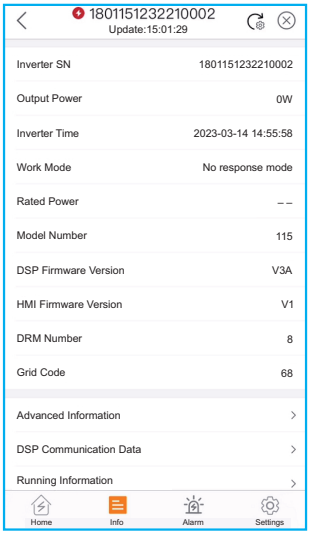

6.3 Alarm Page

Alarm page contains the alarm code of the inverter and its corresponding troubleshooting methods.

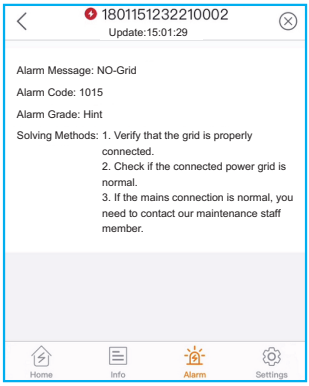

6.4 Setting Page

Setting page contains all the setting options of the inverter.

Functions	Setting Path
Switch on/off the inverter	Settings -> “Power ON” & ”Power OFF”
Change inverter time setting	Settings -> Inverter Setting-> Inverter Parameter Setting -> Inverter Time Setting
Change inverter output power percentage or power factor	Settings -> Inverter Setting-> Inverter Power Setting
Set grid code and protection parameters	Settings -> Grid Parameter Setting -> Grid Code Setting
Set Export Power control	Settings -> EPM Setting
Set grid code related working modes	Settings -> Inverter Work Mode Setting -> Work Mode

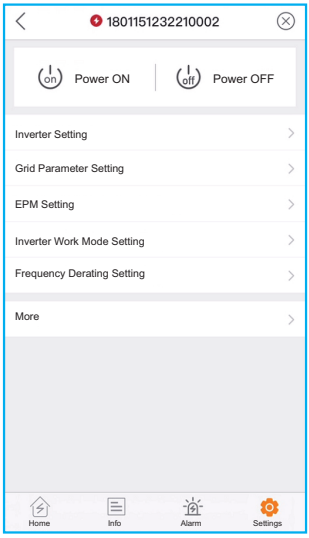

7. Maintenance

Solis S6 Single Phase Inverter does not require any regular maintenance.
However, cleaning the dust on heat-sink will help the inverter to dissipate the heat and increase its life time. The dust can be removed with a soft brush.

CAUTION:
Do not touch the inverter's surface when it is operating. Some parts of the inverter may be hot and cause burns. Turn off the inverterand wait for a cool-down period before any maintenance or cleaning operation.

The Screen and the LED status indicator lights can be cleaned with cloth if they are too dirty to be read.

NOTE:
Never use any solvents, abrasives or corrosive materials to clean the inverter.

8. Troubleshooting

The inverter is designed in accordance with the most important international grid-tied standards and safety and electromagnetic compatibility requirements. Before delivering to the customer, the inverter has been subjected to several tests to ensure its optimal operation and reliability. In case of failure, the APP will display an alarm message. In this case, the inverter may stop feeding into the grid. The failure descriptions and their corresponding alarm messages are listed in Table 8.1:

Message Name	Information Description	Troubleshooting Suggestion
Grid Over Voltage 01 (1010 DATA:0001)	Over grid voltage	1. If it occurs by accident, it may be short-term abnormality of the power grid. The inverter will resume normal work after detecting the normal power grid, and no manual intervention is required.
Grid Over Voltage 02 (1010 DATA:0002)		
Grid Over Voltage 03 (1010 DATA:0003)		
Grid Over Voltage 04 (1010 DATA:0004)		
Grid Over Voltage 05 (1010 DATA:0005)		
Grid Under Voltage 01 (1011 DATA:0001)	Under grid voltage	1. If it occurs by accident, it may be short-term abnormality of the power grid. The inverter will resume normal work after detecting the normal power grid, and no manual intervention is required. 2. If it occurs frequently, check the grid voltage and check whether the grid frequency is in the inverter. Within the allowable range, if not, please contact customer service; if yes, please check if the AC side breaker and output cable are connected properly. 3. If the grid voltage, grid frequency is within the allowable range of the inverter, and the AC side wiring confirmation It is true that this alarm still occurs frequently. After obtaining the consent of the local power operator, please contact customer service to modify the over-voltage and under-frequency protection points of the inverter power grid.
Grid Under Voltage 02 (1011 DATA:0002)		
Grid Over Frequency 01 (1012 DATA:0001)	Over grid frequency	
Grid Over Frequency 02 (1012 DATA:0001)		
Grid under Frequency 01 (1013 DATA:0001)	Under grid frequency	
Grid under Frequency 02 (1013 DATA:0002)		
NO-Grid (1015 DATA:0000)	No grid voltage	1. Verify that the grid is properly connected. 2. Check if the connected power grid is normal. 3. If the mains connection is normal, you need to contact our maintenance staff member.
OV-G-I (1018 DATA:0000)	Over grid current	

Message Name	Information Description	Troubleshooting Suggestion
IGFOL-F (1019 DATA:0000)	Grid current tracking fail	1. Restart the inverter or contact our service personnel.
OV-DC (1020 DATA:0001)	Over DC voltage	1. Check whether the series configuration of the PV strings is excessive, resulting in the open circuit voltage of the PV array being higher than the maximum input voltage of the inverter. If so, reduce the number of strings and make the string open voltage fall within the inverter specification range.
OV-DC (1020 DATA:0002)		
OV-BUS (1021 DATA:0000)	Over DC bus voltage	1. Check if the input voltage exceeds the maximum input voltage of the inverter. 2. Restart the inverter. 3. If it is still not resolved, contact the factory's customer service.
UNB-BUS (1022 DATA:0000)	Unbalance DC bus voltage	
DC Bus Under Voltage 01 (1023 DATA:0001)	DC bus undervoltage	1. Check if the input voltage is too low. 2. Restart the inverter. 3. If it has not been eliminated, contact the factory's customer service.
DC Bus Under Voltage 02 (1023 DATA:0002)	DC bus undervoltage	
OV-DCA-I (1025 DATA:0000)	DC 1 average overcurrent	1. Check whether the MPPT of the A-way is reversed polarity. 2. Restart the inverter. 3. If it has not been eliminated, contact the factory's customer service.
OV-DCB-I (1026 DATA:0000)	DC 2 average overcurrent	1. Check whether the MPPT of the B-way is reversed polarity. 2. Restart the inverter. 3. If it has not been eliminated, contact the factory's customer service.
DC-INTF. (1027 DATA:0000)	DC hardware overcurrent	1. Check whether the DC connection is broken or damaged. 2. Restart the inverter. 3. If it has not been removed, contact the factory's customer service.
Reverse-DC (1028 DATA:0000)	Reverse DC polarity	1. Check if the DC line is reversed. 2. Restart the inverter. 3. If it is still not excluded, please contact the factory customer service.

Message Name	Information Description	Troubleshooting Suggestion
GRID-INTF. (1030 DATA:0000)	AC hardware overcurrent	1. Check whether the AC connection is virtual. 2. Restart the inverter. 3. If it has not been eliminated, contact the factory's customer service.
INI-FAULT (1031 DATA:0000)	Initialization system fault	1. Restart the inverter. 2. If it is still not resolved, contact the factory's customer service.
OV-TEM (1032 DATA:0000)	Over Temperature	1. Check whether the inverter installation position meets the requirements of the user manual. 2. Try to reduce the ambient temperature. 3. Restart the inverter after fifteen minutes. 4. If the error persists, please contact the factory's customer service.
PV Isolation Protection 01 (1033 DATA:0001)	PV Isolation Protection	1. Check whether the PV strings have insulation problems. 2. Check whether the PV cable is damaged.
PV Isolation Protection 02 (1033 DATA:0002)		
Leakage Current Protection 01 (1034 DATA:0001)	Leakage current protection	1. Connect each string component individually to determine if it is caused by a component problem. If there is no error when inserting one of the string components, it can be determined that it is a string problem. Check whether the string in question is broken or not. 2. If this error is only caused by a rainy day or a certain time of the morning, it is because the aging of the module causes the leakage current to be too large. When the weather is fine or the air humidity is reduced, the error will be cleared automatically. Can be resolved through remote upgrade software.
Leakage Current Protection 02 (1034 DATA:0002)		
Leakage Current Protection 03 (1034 DATA:0003)		
Leakage Current Protection 04 (1034 DATA:0004)		
ILeak-Check (1039 DATA:0000)	Leakage current sensor failure	1. Upgrade software to the latest version. 2. If the fault persists, please contact the factory's customer service.
UN-TEM (103A DATA:0000)	Under Temperature	1. Check if the ambient temperature is too low and restart the inverter. If it has not been eliminated, contact the factory's customer service.

Message Name	Information Description	Troubleshooting Suggestion
Relay-FAULT (1035 DATA:0000)	Relay check fail	1. Restart the inverter 2. If it is still not resolved, contact the factory's customer service.
DSP-B-Com-Fau (1036 DATA:0000)	Comm. failure between main and slave DSP	
DCInj-FAULT (1037 DATA:0000)	High DC injection current	
12Power-FAULT (1038 DATA:0000)	12V power supply fault	
AFCI-Check (1040 DATA:0000)	AFCI module self-detect fault	1. Restart the inverter. 2. If it is still not resolved, contact the factory's customer service.
ARC-FAULT (1041 DATA:0000)	Detect arc in DC circuit	1. Check for arc in the inverter connection and restart the inverter.
GRID-INTF02 (1046 DATA:0000)	Power grid disturbance 02	1. Check if the grid side is not healthy. 2. Restart the inverter. If it is still not removed, contact the factory's customer service.
IG-AD (1047 DATA:0000)	Grid current sampling fail	1. Restart the inverter 2. If it is still not resolved, contact the factory's customer service.
IGBT-OV-I (1048 DATA:0000)	Over IGBT current	
State 2 excursion (2043H)	G100 State 2 excursion	The alarm appears when the current flow exceeds “G100V2 Backflow Current” under scenarios stipulated by G100 standard. As required by G100, ”State 2 excursion” alarm should be manually reset. Please select the “Settings -> EPM Setting -> Built-in EPM Setting->G100V2 Alarm Clear" to reset.
Fail Safe 2010H	Meter Communication Fail	1. Check the meter communication and restart the inverter. 2. If it is still not resolved, contact the factory's customer service.
MET_SEL_FAIL 2019H	Meter type select fail	Please select the correct smart meter type in inverter setting based on the smart meter actually connected to the inverter.

Message Name	Information Description	Troubleshooting Suggestion
CT Fault 201AH	CT Fault	The alarm occurs when the CT connected to the inverter or the CT connected to the smart meter loses connection. 1. When the alarm occurs with the “G100V2 Control Switch” on, please check and repair the CT wiring first, then select “Settings -> EPM Setting -> Built-in EPM Setting-> G100V2 Alarm Clear" to reset the alarm. 2. When the alarm occurs with the “G100V2 Control Switch” off, please check and repair the CT wiring and restart the inverter. 3. If it is still not resolved, contact the factory's customer service.
DRM_LINK_FAIL 2018H	DRM link fail	Please check if your DRM control device/ logic interface or its wiring is normal. If there is actually no DRM control device/ logic interface connected, please disable the DRM function in inverter settings.
DRM_CTL_Off 201BH	DRM control inverter to stop	Please check if the DRM function is enabled. This alarm indicates the DRM function controls the inverter to stop. If this is not expected, please disable the DRM function.

Table 8.1 Fault message and description

NOTE:
If the inverter displays any alarm message as listed in Table 8.1; please turn off the inverter and wait for 5 minutes before restarting it .
If the failure persists, please contact your local distributor or the service center.

1. Serial number of Solis Single Phase Inverter;
2. The distributor/dealer of Solis Single Phase Inverter (if available);
3. Installation date.
4. The description of problem (i.e. the alarm message displayed on the LCD and the status of the LED status indicator lights. Other readings obtained from the Information submenu will also be helpful.);
5. The PV array configuration (e.g. number of panels, capacity of panels, number of strings , etc.);
6. Your contact details.

9. Specifications

Model	S6-GR1P3K-S(21A)
Max. DC input voltage (Volts)	550
Rated DC voltage (Volts)	360
Startup voltage (Volts)	60
MPPT voltage range (Volts)	50-550
Max. input current (Amps)	21+21
Max short circuit input current (Amps)	30+30
MPPT number/Max input strings number	2/2
Rated output power (Watts)	3000
Max. output power (Watts)	3000
Max. apparent output power (VA)	3000
Rated grid voltage (Volts)	1/N/PE, 230
Rated output current (Amps)	13.0
Max. output current (Amps)	13.0
Power Factor (at rated output power)	>0.99 (0.8 leading - 0.8 lagging)
THDi (at rated output power)	<3%
Rated grid frequency (Hertz)	50
Operating frequency range (Hertz)	45-55
Max.efficiency	97.3%
EU efficiency	96.6%
Protection class/Over voltage category	I / II(PV), III(AC)
Active anti-islanding method	Active frequency shifting
Dimensions	330W*371H*161D (mm)
Weight	8.8kg
Topology	Transformerless
Self consumption (night)	< 1 W
Operating ambient temperature range	-25℃...+60℃
Relative humidity	0~100%
Ingress protection	IP66
Cooling concept	Natural cooling
Max.operation altitude	4000m
Grid connection standard	AS/NZS 4777.2
Safety/EMC standard	IEC/EN 62109-1/-2, IEC/EN 61000-6-1/-2/-3/-4
DC connection	MC4 connector
AC connection	Quick connection plug
Display	LED digital display & Bluetooth + APP
Export Control Interface	CT/Meter(2-in-1)
Communication connections	RS485, USB, Optional: Wi-Fi, GPRS

9. Specifications

Model	S6-GR1P3.6K-S(21A)
Max. DC input voltage (Volts)	550
Rated DC voltage (Volts)	360
Startup voltage (Volts)	60
MPPT voltage range (Volts)	50-550
Max. input current (Amps)	21+21
Max short circuit input current (Amps)	30+30
MPPT number/Max input strings number	2/2
Rated output power (Watts)	3600
Max. output power (Watts)	3600
Max. apparent output power (VA)	3600
Rated grid voltage (Volts)	1/N/PE, 230
Rated output current (Amps)	15.7
Max. output current (Amps)	15.7
Power Factor (at rated output power)	>0.99 (0.8 leading - 0.8 lagging)
THDi (at rated output power)	<3%
Rated grid frequency (Hertz)	50
Operating frequency range (Hertz)	45-55
Max.efficiency	97.3%
EU efficiency	96.6%
Protection class/Over voltage category	I / II(PV), III(AC)
Active anti-islanding method	Active frequency shifting
Dimensions	330W*371H*161D (mm)
Weight	8.8kg
Topology	Transformerless
Self consumption (night)	< 1 W
Operating ambient temperature range	-25℃...+60℃
Relative humidity	0~100%
Ingress protection	IP66
Cooling concept	Natural cooling
Max.operation altitude	4000m
Grid connection standard	AS/NZS 4777.2
Safety/EMC standard	IEC/EN 62109-1/-2, IEC/EN 61000-6-1/-2/-3/-4
DC connection	MC4 connector
AC connection	Quick connection plug
Display	LED digital display & Bluetooth + APP
Export Control Interface	CT/Meter(2-in-1)
Communication connections	RS485, USB, Optional: Wi-Fi, GPRS

9. Specifications

Model	S6-GR1P4K-S(21A)
Max. DC input voltage (Volts)	550
Rated DC voltage (Volts)	360
Startup voltage (Volts)	60
MPPT voltage range (Volts)	50-550
Max. input current (Amps)	21+21
Max short circuit input current (Amps)	30+30
MPPT number/Max input strings number	2/2
Rated output power (Watts)	4000
Max. output power (Watts)	4000
Max. apparent output power (VA)	4000
Rated grid voltage (Volts)	1/N/PE, 230
Rated output current (Amps)	17.4
Max. output current (Amps)	17.4
Power Factor (at rated output power)	>0.99 (0.8 leading - 0.8 lagging)
THDi (at rated output power)	<3%
Rated grid frequency (Hertz)	50
Operating frequency range (Hertz)	45-55
Max.efficiency	97.6%
EU efficiency	97.1%
Protection class/Over voltage category	I / II(PV), III(AC)
Active anti-islanding method	Active frequency shifting
Dimensions	330W*371H*161D (mm)
Weight	9.4kg
Topology	Transformerless
Self consumption (night)	< 1 W
Operating ambient temperature range	-25℃...+60℃
Relative humidity	0~100%
Ingress protection	IP66
Cooling concept	Natural cooling
Max.operation altitude	4000m
Grid connection standard	AS/NZS 4777.2
Safety/EMC standard	IEC/EN 62109-1/-2, IEC/EN 61000-6-1/-2/-3/-4
DC connection	MC4 connector
AC connection	Quick connection plug
Display	LED digital display & Bluetooth + APP
Export Control Interface	CT/Meter(2-in-1)
Communication connections	RS485, USB, Optional: Wi-Fi, GPRS

9. Specifications

Model	S6-GR1P4.6K-S(21A)
Max. DC input voltage (Volts)	550
Rated DC voltage (Volts)	360
Startup voltage (Volts)	60
MPPT voltage range (Volts)	50-550
Max. input current (Amps)	21+21
Max short circuit input current (Amps)	30+30
MPPT number/Max input strings number	2/2
Rated output power (Watts)	4600
Max. output power (Watts)	4600
Max. apparent output power (VA)	4600
Rated grid voltage (Volts)	1/N/PE, 230
Rated output current (Amps)	20.0
Max. output current (Amps)	20.0
Power Factor (at rated output power)	>0.99 (0.8 leading - 0.8 lagging)
THDi (at rated output power)	<3%
Rated grid frequency (Hertz)	50
Operating frequency range (Hertz)	45-55
Max.efficiency	97.6%
EU efficiency	97.1%
Protection class/Over voltage category	I / II(PV), III(AC)
Active anti-islanding method	Active frequency shifting
Dimensions	330W*371H*161D (mm)
Weight	9.5kg
Topology	Transformerless
Self consumption (night)	< 1 W
Operating ambient temperature range	-25℃...+60℃
Relative humidity	0~100%
Ingress protection	IP66
Cooling concept	Natural cooling with internal fan
Max.operation altitude	4000m
Grid connection standard	AS/NZS 4777.2
Safety/EMC standard	IEC/EN 62109-1/-2, IEC/EN 61000-6-1/-2/-3/-4
DC connection	MC4 connector
AC connection	Quick connection plug
Display	LED digital display & Bluetooth + APP
Export Control Interface	CT/Meter(2-in-1)
Communication connections	RS485, USB, Optional: Wi-Fi, GPRS

9. Specifications

Model	S6-GR1P5K-S(21A)
Max. DC input voltage (Volts)	550
Rated DC voltage (Volts)	360
Startup voltage (Volts)	60
MPPT voltage range (Volts)	50-550
Max. input current (Amps)	21+21
Max short circuit input current (Amps)	30+30
MPPT number/Max input strings number	2/2
Rated output power (Watts)	5000
Max. output power (Watts)	5000
Max. apparent output power (VA)	5000
Rated grid voltage (Volts)	1/N/PE, 230
Rated output current (Amps)	21.7
Max. output current (Amps)	21.7
Power Factor (at rated output power)	>0.99 (0.8 leading - 0.8 lagging)
THDi (at rated output power)	<3%
Rated grid frequency (Hertz)	50
Operating frequency range (Hertz)	45-55
Max.efficiency	97.7%
EU efficiency	97.1%
Protection class/Over voltage category	I / II(PV), III(AC)
Active anti-islanding method	Active frequency shifting
Dimensions	330W*371H*161D (mm)
Weight	9.5kg
Topology	Transformerless
Self consumption (night)	< 1 W
Operating ambient temperature range	-25℃...+60℃
Relative humidity	0~100%
Ingress protection	IP66
Cooling concept	Natural cooling with internal fan
Max.operation altitude	4000m
Grid connection standard	AS/NZS 4777.2
Safety/EMC standard	IEC/EN 62109-1/-2, IEC/EN 61000-6-1/-2/-3/-4
DC connection	MC4 connector
AC connection	Quick connection plug
Display	LED digital display & Bluetooth + APP
Export Control Interface	CT/Meter(2-in-1)
Communication connections	RS485, USB, Optional: Wi-Fi, GPRS

9. Specifications

Model	S6-GR1P6K-S(21A)
Max. DC input voltage (Volts)	550
Rated DC voltage (Volts)	360
Startup voltage (Volts)	60
MPPT voltage range (Volts)	50-550
Max. input current (Amps)	21+21
Max short circuit input current (Amps)	30+30
MPPT number/Max input strings number	2/2
Rated output power (Watts)	6000
Max. output power (Watts)	6000
Max. apparent output power (VA)	6000
Rated grid voltage (Volts)	1/N/PE, 230
Rated output current (Amps)	26.1
Max. output current (Amps)	26.1
Power Factor (at rated output power)	>0.99 (0.8 leading - 0.8 lagging)
THDi (at rated output power)	<3%
Rated grid frequency (Hertz)	50
Operating frequency range (Hertz)	45-55
Max.efficiency	97.7%
EU efficiency	97.1%
Protection class/Over voltage category	I / II(PV), III(AC)
Active anti-islanding method	Active frequency shifting
Dimensions	330W*371H*161D (mm)
Weight	9.5kg
Topology	Transformerless
Self consumption (night)	< 1 W
Operating ambient temperature range	-25℃...+60℃
Relative humidity	0~100%
Ingress protection	IP66
Cooling concept	Natural cooling with internal fan
Max.operation altitude	4000m
Grid connection standard	AS/NZS 4777.2
Safety/EMC standard	IEC/EN 62109-1/-2, IEC/EN 61000-6-1/-2/-3/-4
DC connection	MC4 connector
AC connection	Quick connection plug
Display	LED digital display & Bluetooth + APP
Export Control Interface	CT/Meter(2-in-1)
Communication connections	RS485, USB, Optional: Wi-Fi, GPRS

Ginlong Technologies Co., Ltd.
No. 57 Jintong Road, Binhai Industrial Park, Xiangshan, Ningbo,
Zhejiang, 315712, P.R.China.
Tel: +86 (0)574 6578 1806
Email:info@ginlong.com
Web: www.solisinverters.au

Please adhere to the actual products in case of any discrepancies in this user manual.

If you encounter any problem on the inverter, please find out the inverter S/N and contact us, we will try to respond to your question ASAP.

Type Approved
Safety
Regular Production
Surveillance
TÜVRheinland
CERTIFIED
www.tuv.com
ID 2000000000